Desire Series 3 Cool Touch Thermostatic Shower Mixer with Riser Rail Kit
Code: MLSHDE3

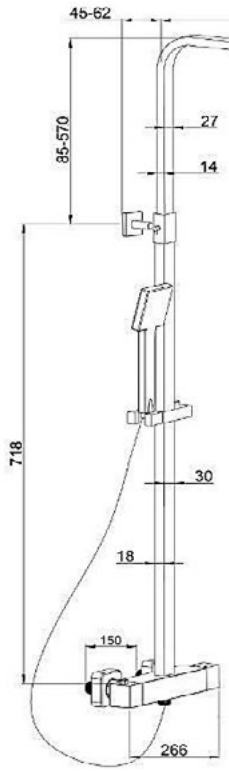

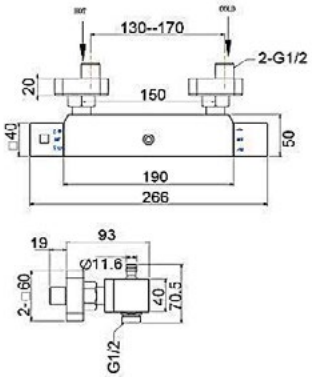

Construction	Brass Body (CuZn40Pb18)
Finishes	Chrome plated to BS EN 248
Product Type	Contemporary
Water Pressure	Min. 0.5 bar, Max. 6.0 bar
Plumbing Systems	Suitable for all plumbing systems, preferably balanced. Min. supply pressure differential requirement is 5:1
Standards	Complies with BSEN 1111
Cartridge	Thermostatic
Fitting	Escutcheon
Guarantee	10 years against manufacturing faults (3 Years on Serviceable Parts).

Additional Information

1. Temperature: Pre-set 38°C, with push button override to 48°C.
2. Automatic shut off in the event of hot or cold water supply failure.
3. Shower head: Chrome , Ø200mm, ABS
4. Shower handset: Chrome , 3 mode, ABS
5. Shower hose: PVC easy clean hose,1.5m

WRAS

Flow Rates (Litres per minute)

System Pressure	0.1 Bar	0.2 Bar	0.3 Bar	0.5 Bar	1.0 Bar	1.5 Bar	2.0 Bar	3.0 Bar	4.0 Bar	5.0 Bar
MLSHDE3	3.7	-	-	8.9	13.4	-	-	23.7	-	-

The information contained on this page was correct at date of issue. Fitting dimensions are provided as a guide only. Some variation may occur due to manufacturing tolerances. We pursue a policy of continuing improvement in design and performance of our products and so reserve the right to change specifications without prior notice.

Greenbank Industrial Estate, Newry, Co. Down BT34 2QU
Tel: +44 28 3025 6392 E-mail: sales@mylifebathrooms.com

www.mylifebathrooms.com