MYLIFE

ZARA 1000 x 600mm Mirror
Code: MLMIZAR100

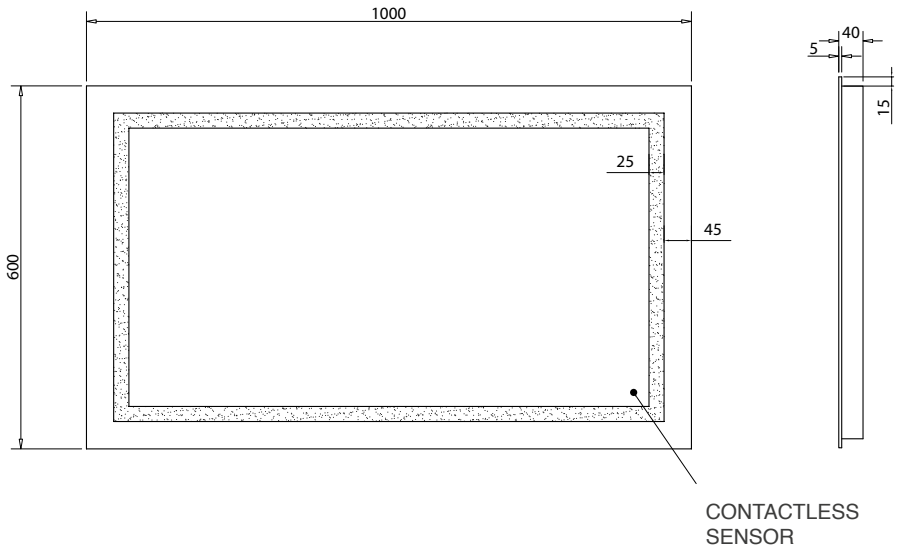

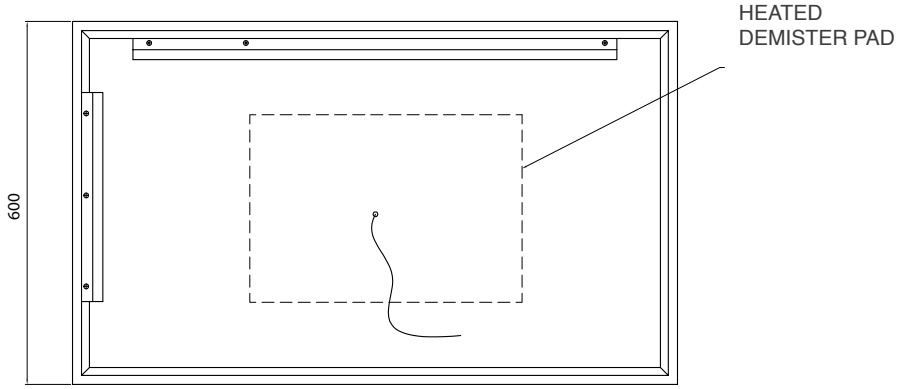

H 600 x W 1000 x D 40mm

Features

- LED Mirror
- Multi Functional Contactless Sensor Controls Light from Cool - Warm & Brightness with Memory Function
- Landscape or Portrait
- Heated Demister Pad
- IP44

The information contained on this page was correct at date of issue. Fitting dimensions are provided as a guide only. Some variation may occur due to manufacturing tolerances.
We pursue a policy of continuing improvement in design and performance of our products and so reserve the right to change specifications without prior notice.

Greenbank Industrial Estate, Newry, Co. Down BT34 2QU
Tel: +44 28 3025 6392 E-mail: sales@mylifebathrooms.com

www.mylifebathrooms.com